Anritsu

MP1777A

10 GHz Jitter Analyzer

STM-16 to 64, OC-48 to 192

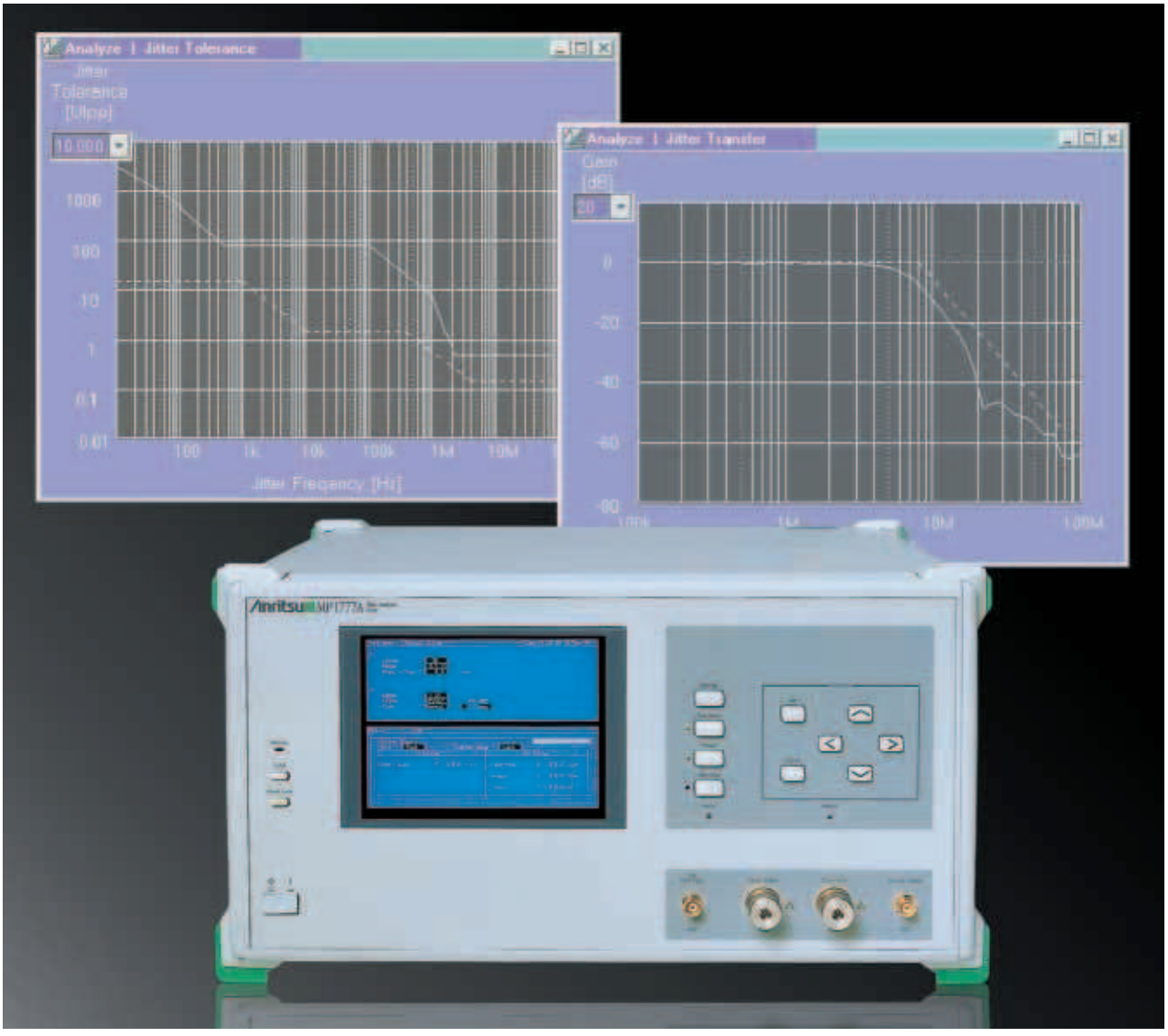

For STM-64/OC-192 Jitter Evaluation

For STM-64/OC-192 Jitter Evaluation

The MP1777A is a measurement solution for jitter evaluation. It supports both the STM-16/32/64 and OC-48/96/192 bit rates. In addition to supporting the bit rates of 2488.32, 4976.64, and 9953.28 MHz four additional bit rates used in submarine cable systems can be added as options.
The MP1777A can evaluate jitter characteristics, including jitter tolerance, jitter transfer and output jitter, which are parameters most commonly used to evaluate digital lines.
The MX177701A Jitter Performance Test Software (bundled with MP1777A) allows the MP1777A to be controlled remotely from a controller. And when the Jitter Performance Test Software is used together with specified auxiliary measuring instruments, jitter tolerance and jitter transfer characteristics can be measured automatically.

•Conforms to O.172 Recommendations

The MP1777A meets the STM-64/OC-192 measurement standards. It is compatible with bandwidths up to 80 MHz and jitter modulation amplitudes up to 3200 UIp-p.
*March, 1999 edition

•Four Optional Series of Bit Rates

Current submarine cable systems add FEC (forward error correction) to signals to enhance quality. The MP1777A can also support two series of bit rates by adding Option 01 (2494.16, 4988.32, 9976.64 MHz), Option 02 (2666.0571, 5332.1142, 10664.2284 MHz), Option 04 (3062.3629, 6124.7259, 12249.4517 MHz) and Option 05 (3069, 6138, 12276 MHz).

•Automatic Jitter Measurement

The MX177701A Jitter Performance Test Software is used for automatic jitter measurement and can be used with the MP1777A to configure an automatic measurement system for jitter tolerance and jitter transfer characteristics*1.

*1: Requires MS4630B Network Analyzer, MP1763B Pulse Pattern Generator and MP1764A Error Detector for automatic measurement of jitter tolerance. Requires MS4630B Network Analyzer and MP1763B Pulse Pattern Generator for automatic measurement of jitter transfer. Also requires controller, MX177701A Jitter Performance Test Software, GPIB card and cables.

Application Examples

•Jitter Generation

To generate jitter an external signal generator is required to source a modulation signal. The MX177701A Jitter Performance Test Software and a GPIB card are required for automatic measurement. It is also possible to perform manual measurements which does not require these items.

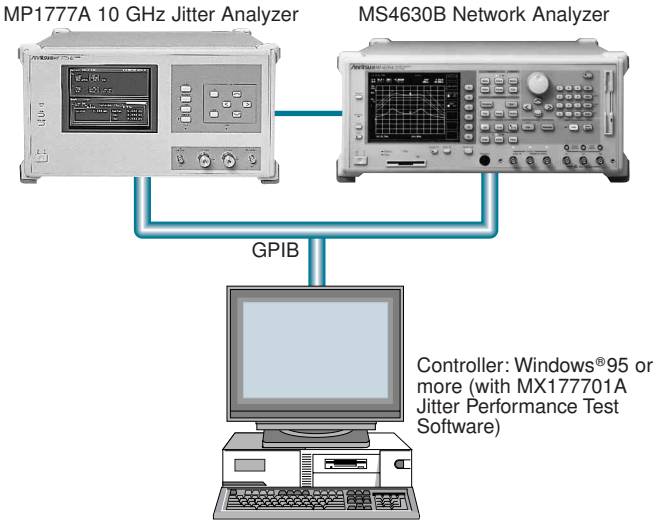

•Jitter Measurement

The MP1777A can measure the jitter of input signals directly without using an external BPF. When Option 10 (High Sensitive Input) is installed, it can measure the jitter of input signals with amplitudes down to 150 mVp-p. In this case, it can perform evaluation by direct device connection. The MX177701A Jitter Performance Test Software and a GPIB card are required for automatic measurement. Manual measurement is also possible and the measurement results are checked on the MP1777A screen. Furthermore, UIp-p, UI+p, UI-p, and UIrms can also be measured.
By combining the MP9677B E/O and O/E Converter, the MP1777A can measure the jitter measurement of optical interfaces.

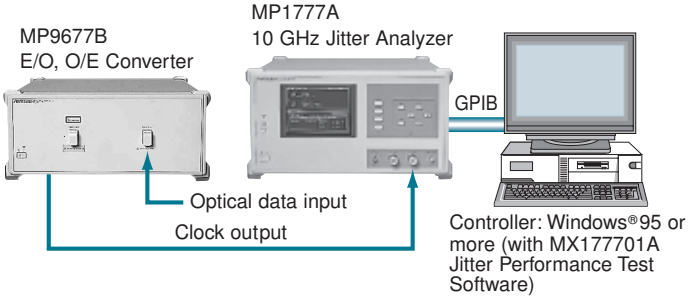

•Jitter Tolerance Measurement

By combining the O/E and E/O converters, the MP1777A can measure the jitter tolerance of optical interfaces. The MX177701A Jitter Performance Test Software and a GPIB card are required for automatic measurement. It is also possible to perform manual measurements without these items.

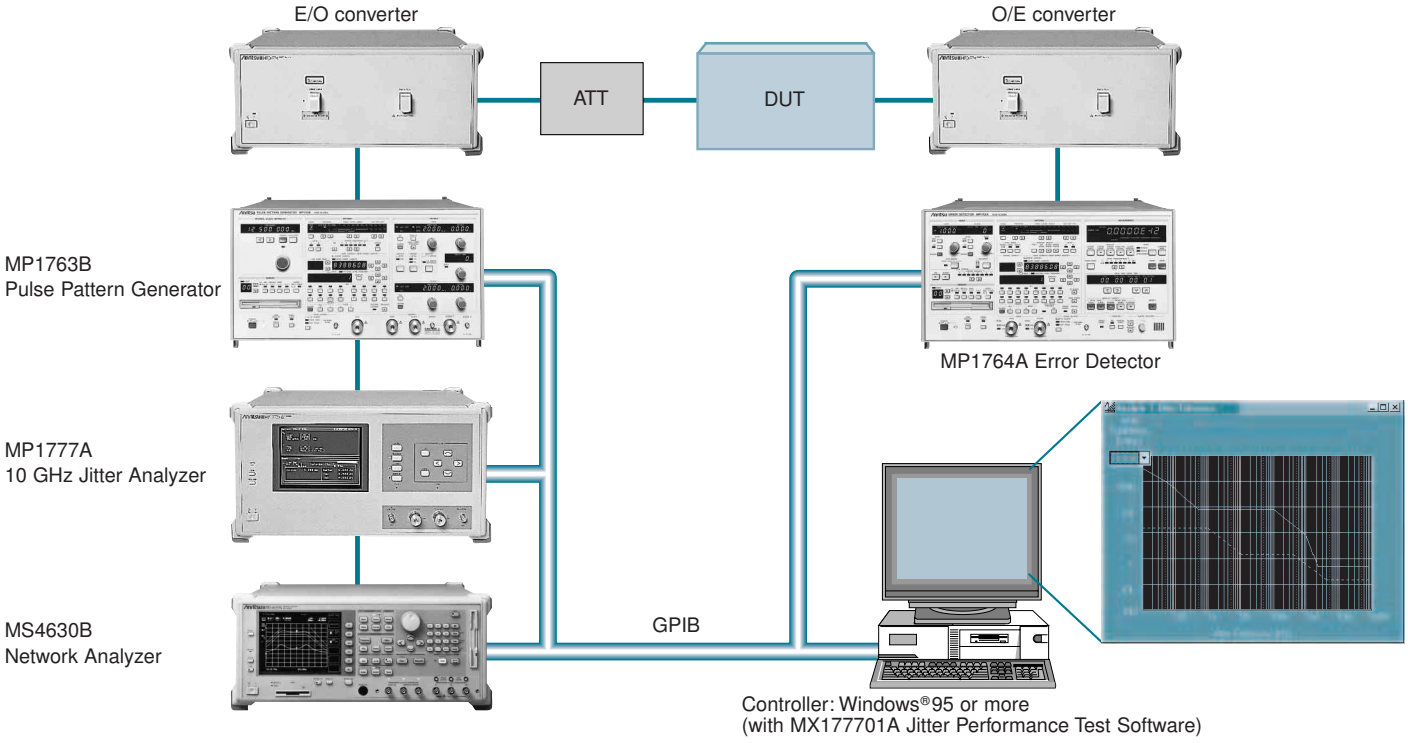

•Measuring Jitter Transfer Characteristics

The MP1777A can evaluate jitter transfer characteristics up to 80 MHz in applications such as 10 Gbit/s clock recovery module (O/E converter) evaluation. Automatic (using MX177701A external software/GPIB) and manual measurements are possible.
By combining the MP9677B E/O and O/E Converter, the MP1777A can evaluate the jitter transfer characteristics up to 80 MHz at optical interfaces.

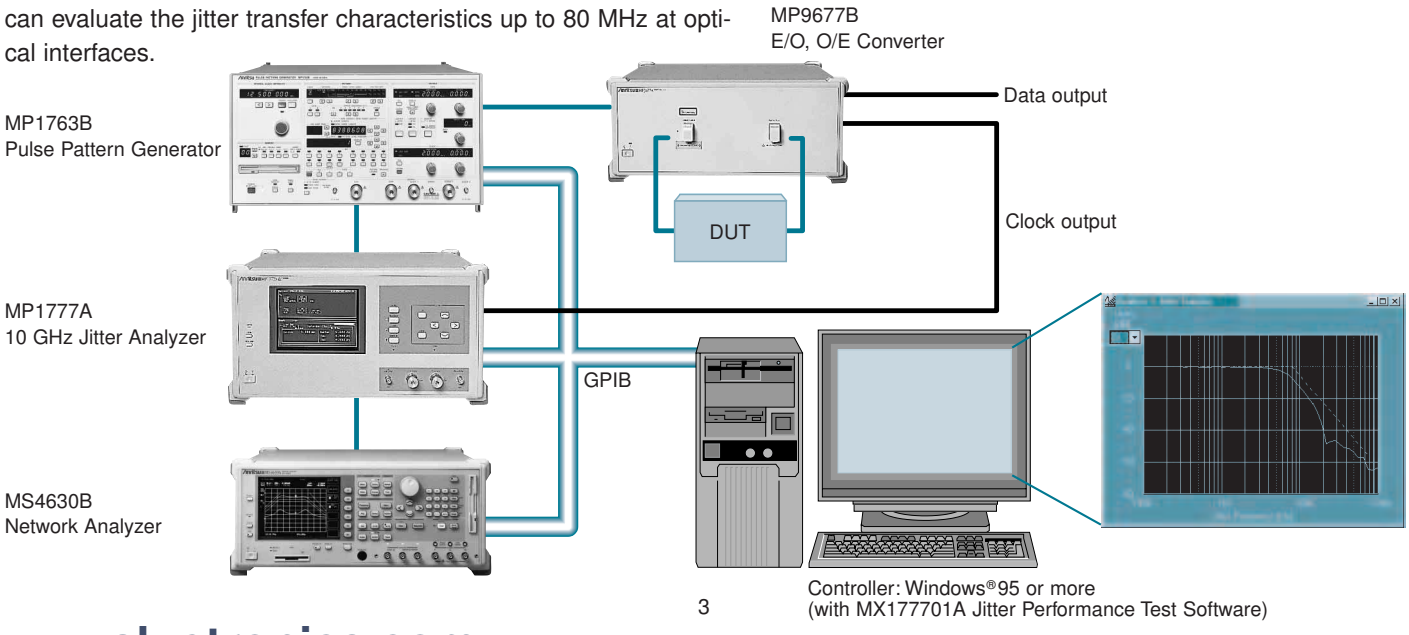

MP1777A 10 GHz Jitter Analyzer

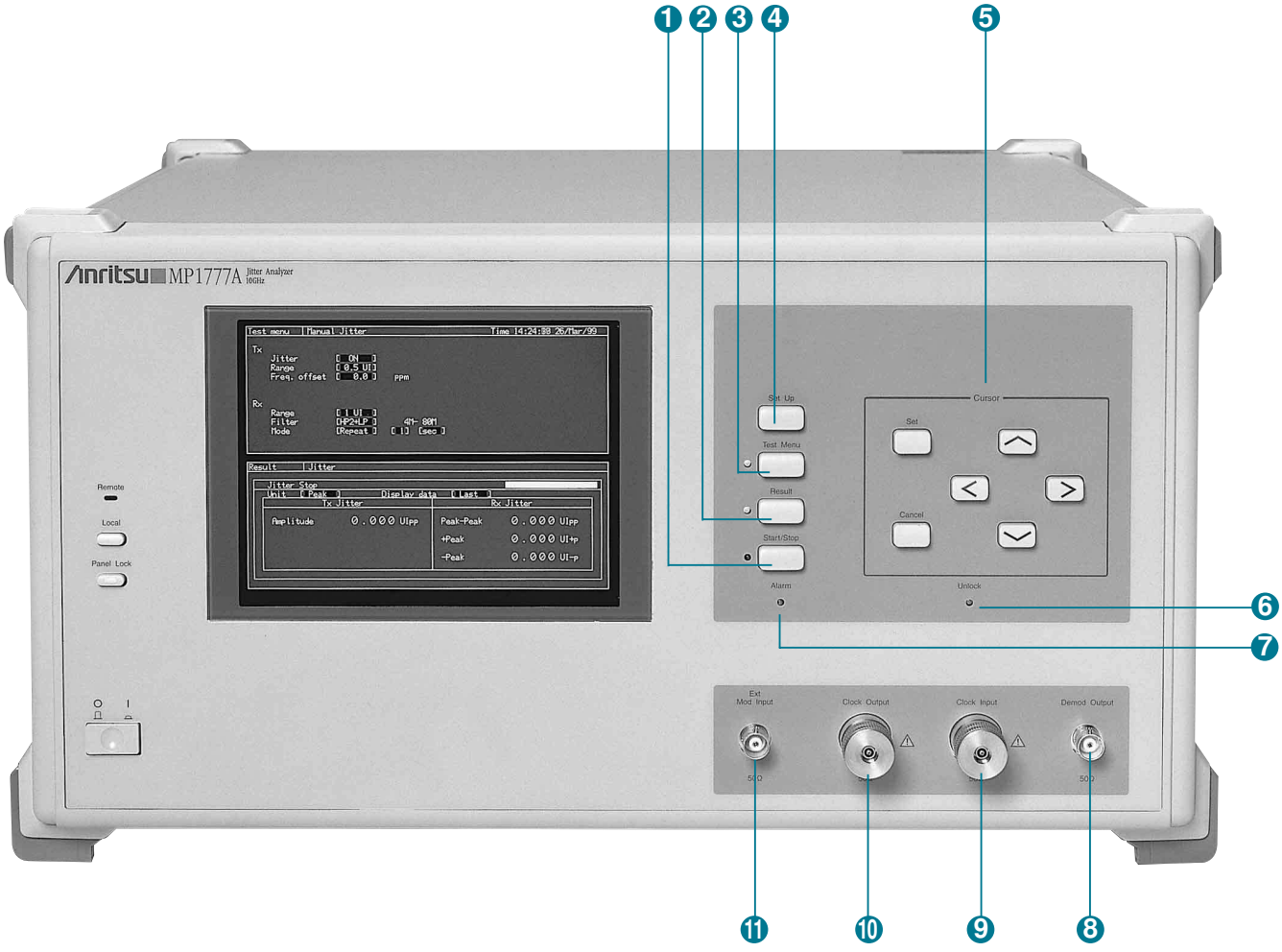

❶ **Start/Stop:** Used to start/stop measurement
❷ **Result:** Displays main measurement results screen
❸ **Test Menu:** Displays test menu screen
❹ **Setup:** Displays setup screen
❺ **Cursor**

Set: Used to set data, input numeric values, and open ASCII window

Cancel: Used when setting data. Also used to cancel input numeric values, and to close string windows

<, ∧, ∨, >: Used to move cursor on screen or window cursor. In the numeric value input window, the ∧ and ∨ keys are used to increase and decrease the numeric values, respectively.

❻ **Unlock:** Lights when jitter receiver unlocked
❼ **Alarm:** Lights when jitter transmitter unlocked
❽ **Demod. Output:** Detected jitter analog signal output, BNC connector (50 Ω)
❾ **Clock Input:** Clock input, APC 3.5 connector (50 Ω)
❿ **Clock Output:** Clock output, APC 3.5 connector (50 Ω)
⓫ **Ext Mod Input:** External modulation signal input, BNC connector (50 Ω)

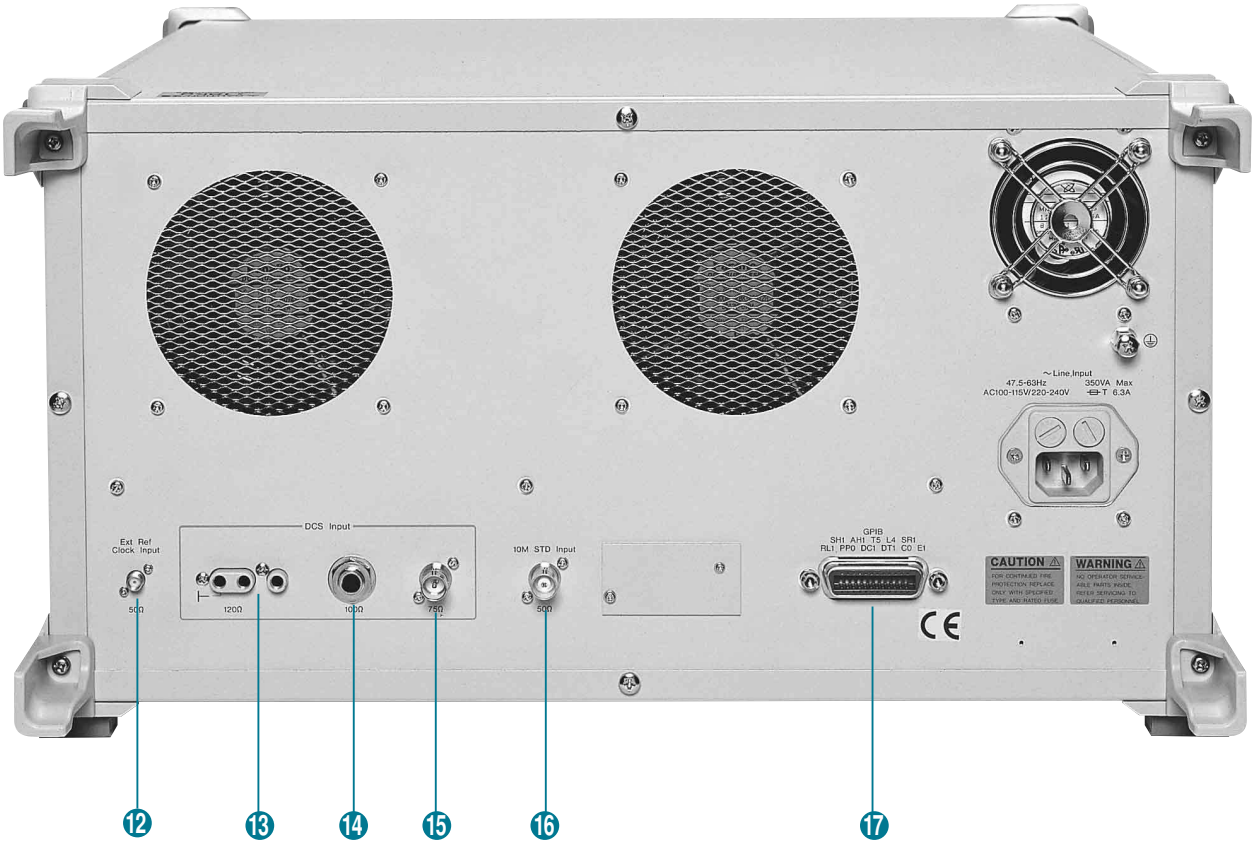

⑫ **Ext Ref Clock Input:** External reference signal input (155.52 MHz standard)

⑬ **DCS Input (120 Ω):** Input to synchronize with external signal. Input clock or data conforming to ITU-T G.703-10.

⑭ **DCS Input (100 Ω):** Input to synchronize with external signal. Input AMI, or B8ZS data conforming to ANSI TI.

⑮ **DCS Input (75 Ω):** Input to synchronize with external signal. Input clock or HDB3 data conforming to ITU-T G.703-10.

⑯ **10M STD Input:** Input to synchronize with external 10 MHz signal

⑰ **GPIB:** GPIB interface

Specifications

Bit rate

Standard: 2488.32, 4976.64, 9953.28 Mbit/s
Option 01: 2494.16, 4988.32, 9976.64 Mbit/s
Option 02: 2666.0571, 5332.1143, 10664.2286 Mbit/s
Option 04: 3062.3629, 6124.7259, 12249.4517 Mbit/s
Option 05: 3069, 6138, 12276 Mbit/s
✻Option 02, 04 and 05 can not be installed simultaneously.

Jitter generation

Modulation frequency: 10 Hz to 80 MHz
Amplitude: 0 to 3200 UIp-p
Resolution: 0.001 UIp-p (0.5 UI range), 0.01 UIp-p (20, 40, 80 UI range), 1 UIp-p (800, 1600, 3200 UI range)

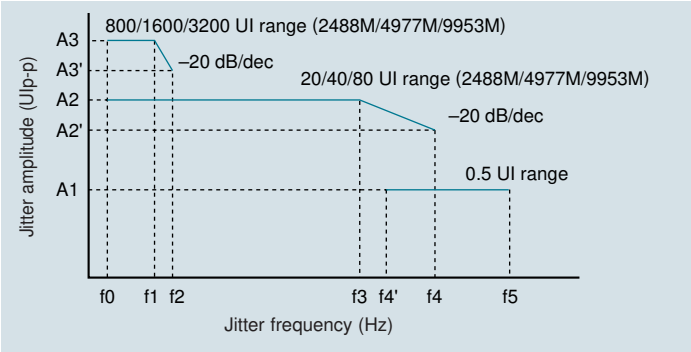

Bit rate (bit/s)	f0 (Hz)	f1 (Hz)	f2 (Hz)	f3 (kHz)	f4 (MHz)	f4' (kHz)	f5 (MHz)	A1 (UIp-p)	A2' (UIp-p)	A2 (UIp-p)	A3' (UIp-p)	A3 (UIp-p)
2488M	10	15	480	100	2	100	20	0.5	1	20	25	800
4977M	10	15	480	100	2	100	40	0.5	2	40	50	1600
9953M	10	15	480	100	2	100	80	0.5	4	80	100	3200

Accuracy:
±5% ±10 UIp-p/Fr (3200 UI range), ±5% ±8 UIp-p/Fr (1600 UI range), ±5% ±5 UIp-p/Fr (800 UI range),
±5% ±0.8 UIp-p/Fr (80 UI range), ±5% ±0.6 UIp-p/Fr (40 UI range), ±5% ±0.3 UIp-p/Fr (20 UI range),
±5% ±0.1 UIp-p/Fr (0.5 UI range/10G), ±5% ±0.08 UIp-p/Fr (0.5 UI range/5G), ±5% ±0.05 UIp-p/Fr (0.5 UI range/2.5G)
Fr: 100 kHz (0.5, 20, 40, 80 UI range), 10 Hz (800, 1600, 3200 UI range)
Frequency response error (Fr Hz):
±5% (10 to 20 Hz), ±2% (20 Hz to 300 kHz), ±3% (300 kHz to 1 MHz), ±5% (1 to 3 MHz), ±10% (3 to 10 MHz), ±15% (10 to 80 MHz)

Frequency offset

Range: ±50 ppm (0.1 ppm steps)
Accuracy: ±0.1 ppm (after power-on, calibrates after 60 min. warm-up 23 ±5°C)

Auxiliary interface

External modulation input, external 10 MHz reference input, DCS input, external reference clock input

Jitter measurement

Modulation frequency: 100 Hz to 80 MHz
Amplitude: 0 to 4.00 UIp-p, 0 to 1.41 UIrms
Resolution: 0.001 UIp-p/0.001 UIrms (1 UI range), 0.01 UIp-p/0.01 UIrms (4 UI range)

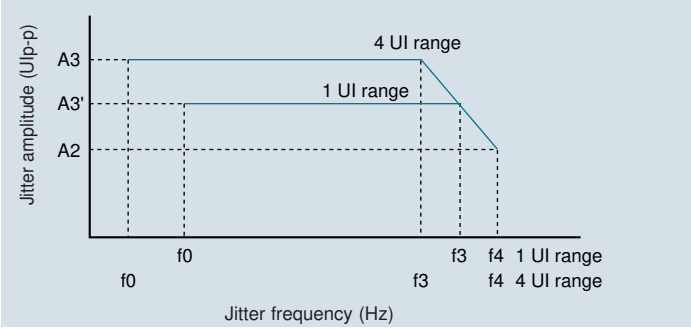

Bit rate(bit/s)		A2 (UIp-p)	A3' (UIp-p)	A3 (UIp-p)	f0 (Hz)	f3 (MHz)	f4 (MHz)
2488M	1 UI range	0.5	1	—	100	10	20
	4 UI range	0.5	—	4	100	2.5	20
4977M	1 UI range	0.5	1	—	100	20	40
	4 UI range	0.5	—	4	100	5	40
9953M	1 UI range	0.5	1	—	100	40	80
	4 UI range	0.5	—	4	100	10	80

<table>
<tr><td>Jitter measurement</td><td>Accuracy
[UIp-p]: ±5 % ±W UIp-p (Fr Hz)
[UIrms]: ±5 % ±Y UIrms (Fr Hz), Fr: 100 kHz
Frequency response error (Fr Hz):
±5% (10 to 20 Hz), ±2% (20 Hz to 300 kHz), ±3% (300 kHz to 1 MHz), ±5% (1 to 3 MHz), ±10% (3 to 10 MHz), ±15% (10 to 80 MHz)
<table>
<tr><th rowspan="2">bit rate (bit/s)</th><th colspan="2">W (UIp-p)*1</th><th colspan="2">Y (UIrms)*2</th></tr>
<tr><th>1 UI</th><th>4 UI</th><th>1 UI</th><th>4 UI</th></tr>
<tr><td>2488M</td><td>0.05</td><td>0.22</td><td>0.008</td><td>0.08</td></tr>
<tr><td>4977M</td><td>0.07</td><td>0.24</td><td>0.009</td><td>0.09</td></tr>
<tr><td>9953M</td><td>0.09</td><td>0.26</td><td>0.010</td><td>0.10</td></tr>
</table>
*1 With HP1 + LP, *2 With HP + LP
Filters: LP, HP1 + LP, HP1' + LP, HP2 + LP, HP + LP, HP' + LP
<table>
<tr><th>bit rate (bit/s)</th><th>HP1 (kHz)</th><th>HP1' (kHz)</th><th>HP2 (MHz)</th><th>HP (kHz)</th><th>HP' (kHz)</th><th>LP (MHz)</th></tr>
<tr><td>2488M</td><td>5</td><td>—</td><td>1</td><td>12</td><td>—</td><td>20</td></tr>
<tr><td>4977M</td><td>8</td><td>—</td><td>2</td><td>12</td><td>—</td><td>40</td></tr>
<tr><td>9953M</td><td>10</td><td>20</td><td>4</td><td>12</td><td>50</td><td>80</td></tr>
</table></td></tr>
<tr><td>Auxiliary interface</td><td>Demodulation output</td></tr>
<tr><td>Internal memory</td><td>Measurement conditions: 10</td></tr>
<tr><td>Others</td><td>GPIB, Buzzer, Time</td></tr>
<tr><td>Dimensions and mass</td><td>426 (W) x 221.5 (H) x 451 (D) mm, ≤23 kg (with option)</td></tr>
<tr><td>Power</td><td>100 to 240 Vac, 47.5 to 63 Hz, ≤350 VA</td></tr>
<tr><td>Temperature</td><td>10˚ to 40˚C</td></tr>
<tr><td>EMC</td><td>EN61326 : 1997/A1: 1998 (Class A), EN61000-3-2: 1995/A2: 1998 (Class A), EN61326: 1997/A1: 1998 (Annex A)</td></tr>
<tr><td>LVD</td><td>EN61010-1: 1993/A2: 1995 (Installation category II, Pollution degree 2)</td></tr>
</table>

•Operation environment

Applicable instruments	Pulse Pattern Generators: MP1763B (12.5 GHz), MP1570A SONET/SDH/PDH/ATM Analyzer Error Detectors: MP1764A (12.5 GHz), MP1570A SONET/SDH/PDH/ATM Analyzer Network Analyzer: MS4630B (300 MHz, with Option 10) E/O, O/E Converter: MP9677B E/O, O/E Converter
Recommended controller	Personal computer: IBM-PC/AT compatible OS: Windows®95 (English) or Windows®98 (English) CPU: Pentium (75 MHz or faster) Memory size: 16 Mbyte min. HDD free space: ≥300 kbyte for full install GPIB interface: National Instruments AT-GPIB/TNT (PnP), AT-GPIB/TNT+, PCMCIA-GPIB, or PCMCIA-GPIB+ and Windows driver (for Windows®95 or Windows®98) Swap file size: ≥40 Mbyte guaranteed Display colors: Set to 256 Number of applications running simultaneously: 1 (unable to run other applications simultaneously)

Ordering Information

Please specify the model/order number, name, and quality when ordering.

Model/order No.	Name		Remarks
	Main frame		
MP1777A	10 GHz Jitter Analyzer		
	Standard accessories		
J0670A	AC power cord:	1 pc	
F0014	Fuse, 6.3 A:	2 pcs	
B0329D	Front cover:	1 pc	
W1497AE	MP1777A operation manual:	1 copy	
W1498AE	MP1777A remote control operation manual:	1 copy	
J0496	APC 3.5 J-J connector:	2 pcs	
J0900E	SMA cable (50 Ω), 1.5 m:	2 pcs	AA-165-1500
J0776C	BNC cable (50 Ω), 1 m:	3 pcs	
J0008	GPIB cable, 2 m:	1 pc	
MX177701A	Jitter Performance Test Software*1:	1 pc	
W1499AE	MX177701A operation manual:	1 copy	
	Options		
MP1777A-01	2494M/4988M/9977M Jitter*2		
MP1777A-02	2666M/5332M/10664M Jitter*3		
MP1777A-04	3062M/6124M/12249M Jitter*4		
MP1777A-05	3069M/6138M/12276M Jitter*5		
MP1777A-10	High sensitive input		0.15 to 1.3 Vp-p
	Application equipment		
MS4630B	Network Analyzer		10 Hz to 300 MHz (with Option 10)
MP1763B	Pulse Pattern Generator		12.5 GHz
MP1764A	Error Detector		12.5 GHz
MP1570A	SONET/SDH/PDH/ATM Analyzer		
MP9677B	E/O, O/E Converter		Jitter bandwidth: 80 MHz

*1: Please confirm the operating system.
*2: 2494.16, 4988.32, 9976.64 MHz
*3: 2666.0571, 5332.1142, 10664.2284 MHz
*4: 3062.3629, 6124.7259, 12249.4517 MHz
*5: 3069, 6138, 12276 MHz

Anritsu

Specifications are subject to change without notice.

ANRITSU CORPORATION
MEASUREMENT SOLUTIONS
5-10-27, Minamiazabu, Minato-ku, Tokyo 106-8570, Japan
Phone: +81-3-3446-1111
Telex: J34372
Fax: +81-3-3442-0235

● **U.S.A.**
ANRITSU COMPANY
North American Region Headquarters
1155 East Collins Blvd., Richardson, Tx 75081, U.S.A.
Toll Free: 1-800-ANRITSU (267-4878)
Phone: +1-972-644-1777
Fax: +1-972-671-1877

● **Canada**
ANRITSU ELECTRONICS LTD.
Unit 102, 215 Stafford Road West
Nepean, Ontario K2H 9C1, Canada
Phone: +1-613-828-4090
Fax: +1-613-828-5400

● **Brasil**
ANRITSU ELETRÔNICA LTDA.
Praia de Botafogo 440, Sala 2401 CEP 22250-040,
Rio de Janeiro, RJ, Brasil
Phone: +55-21-5276922
Fax: +55-21-537-1456

● **U.K.**
ANRITSU LTD.
200 Capability Green, Luton, Bedfordshire LU1 3LU, U.K.
Phone: +44-1582-433200
Fax: +44-1582-731303

● **Germany**
ANRITSU GmbH
Grafenberger Allee 54-56, 40237 Düsseldorf, Germany
Phone: +49-211-96855-0
Fax: +49-211-96855-55

● **France**
ANRITSU S.A.
9, Avenue du Québec Z.A. de Courtabœuf 91951 Les Ulis Cedex, France
Phone: +33-1-60-92-15-50
Fax: +33-1-64-46-10-65

● **Italy**
ANRITSU S.p.A.
Via Elio Vittorini, 129, 00144 Roma EUR, Italy
Phone: +39-06-509-9711
Fax: +39-06-502-24-25

● **Sweden**
ANRITSU AB
Botvid Center, Fittja Backe 1-3 145 84 Stockholm, Sweden
Phone: +46-853470700
Fax: +46-853470730

● **Spain**
ANRITSU ELECTRÓNICA, S.A.
Europa Empresarial Edificio Londres, Planta 1, Oficina 6 C/ Playa de Liencres, 2 28230 Las Rozas. Madrid, Spain
Phone: +34-91-6404460
Fax: +34-91-6404461

● **Singapore**
ANRITSU PTE LTD.
10, Hoe Chiang Road #07-01/02, Keppel Towers, Singapore 089315
Phone: +65-282-2400
Fax: +65-282-2533

● **Hong Kong**
ANRITSU COMPANY LTD.
Suite 719, 7/F., Chinachem Golden Plaza, 77 Mody Road, Tsimshatsui East, Kowloon, Hong Kong, China
Phone: +852-2301-4980
Fax: +852-2301-3545

● **Korea**
ANRITSU CORPORATION
14F Hyun Juk Bldg. 832-41, Yeoksam-dong, Kangnam-ku, Seoul, Korea
Phone: +82-2-553-6603
Fax: +82-2-553-6604~5

● **Australia**
ANRITSU PTY LTD.
Unit 3/170 Forster Road Mt. Waverley, Victoria, 3149, Australia
Phone: +61-3-9558-8177
Fax: +61-3-9558-8255

● **Taiwan**
ANRITSU COMPANY INC.
6F, 96, Sec. 3, Chien Kou North Rd. Taipei, Taiwan
Phone: +886-2-2515-6050
Fax: +886-2-2509-5519

Catalog No. MP1777A-E-A-1-(5.00) Printed in Japan 2002-2 20W/M